Current part is item (12) on diagram. Available at www.oshkoshequipment.com

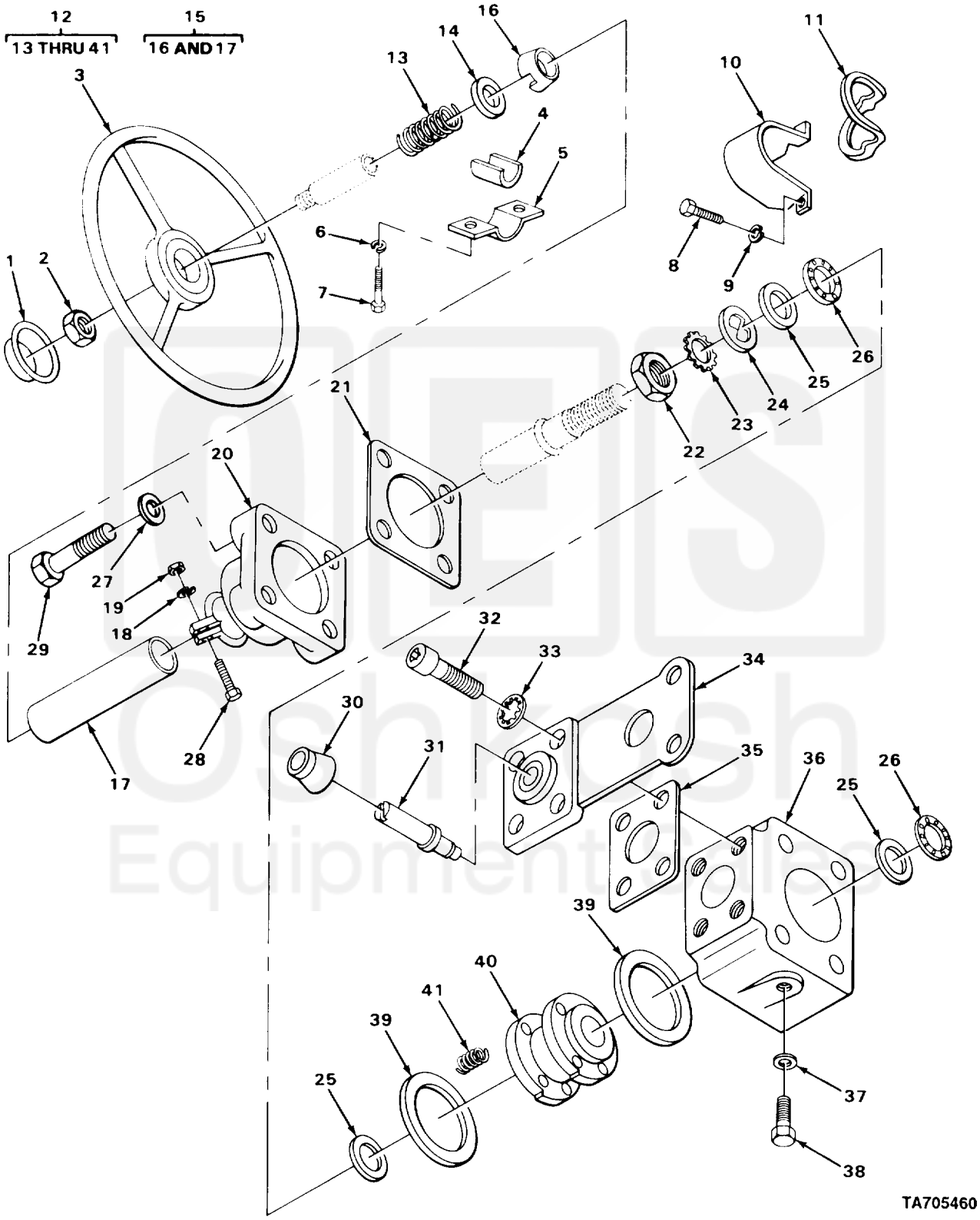

FIGURE 134. STEERING GEAR (UPPER SECTION).

Current part is item (12) on diagram. Available at www.oshkoshequipment.com

Current part is item (12) on diagram. Available at www.oshkoshequipment.com

(1) ITEM NO	(2) SMR CODE	(3) CAGEC	(4) PART NUMBER	(5) DESCRIPTION AND USABLE ON CODES (UOC)	(6) QTY
				GROUP 1401 MECHANICAL STEERING GEAR ASSEMBLY	
				FIG. 134 STEERING GEAR (UPPER SECTION)	
1	PAFZZ	77915	6000553	BUTTON,PLUG	1
2	PFFZZ	77640	026115	NUT,PLAIN,HEXAGON UOC:CQK,U72	1
2	PAFZZ	77640	C20	NUT,PLAIN,HEXAGON UOC:CMP,CMQ,U73,U74	1
3	PAFZZ	77915	79210	STEERING WHEEL	1
4	XBFZZ	04285	M67845	CLAMP,INSOLATOR STEERING GEER BRACKET UOC:CQK,U72	1
4	XBFZZ	03677	LT1-1096	INSULATION STEERING GEAR BRACKET UOC:CMP,CMQ,U73,U74	1
5	XBFZZ	04285	S69108	BRACKET STEERING GEAR ASSEMBLY MTG UOC:CQK,U72	1
5	XBFZZ	03677	LT1-1085	BRACKET STEERING GEAR ASSEMBLY MTG UOC:CMP,CMQ,U73,U74	1
6	PFFZZ	96906	MS35338-45	WASHER,LOCK STEERING GEAR BRACKET MTG	2
6	PAFZZ	96906	MS35338-046	WASHER,LOCK BRACKET MTG	2
7	PFFZZ	96906	MS90728-31	BOLT,MACHINE STEERING GEAR BRACKET MTG	2
8	PFFZZ	96906	MS90728-6	SCREW,CAP,HEXAGON H LEVER COVER MTG	2
9	PFFZZ	96906	MS35333-40	WASHER,LOCK LEVER COVER MTG	2
10	PAFZZ	77640	415138	COVER,LEVER STEERING WHEEL	1
11	PAFZZ	77640	415149	GASKET STEERING WHEEL	1
12	PAFZZ	77640	HPS71544	STEERING GEAR ASSEM	1
13	PAFZZ	77640	401249	.SPRING,HELICAL,COMP STEERING COLUMN	1
14	PFFZZ	77640	028293	.WASHER,KEY STEERING COLUMN	1
15	PFFZZ	77640	096119A1-4231	.JACKET,STEERING	1
16	PAFZZ	77640	065997	..BEARING,BALL,STEERI	1
17	XAFZZ	77640	096119-4225	..JACKET	1
18	PAFZZ	96906	MS35338-046	.WASHER,LOCK JACKET CLAMPING	1
19	PFFZZ	96906	MS51967-8	.NUT,PLAIN,HEXAGON JACKET CLAMPING	1
20	XDFZZ	77640	HPS526001	.COVER	1
21	PAFZZ	77640	034060	.GASKET TOP COVER	1
22	XBFZZ	77640	9127709	.NUT,LOCK STEERING COLUMN	1
23	PFFZZ	77640	028294	.WASHER,KEY STEERING COLUMN	1
24	PFFZZ	77640	028293	.WASHER,KEY STEERING COLUMN	1
25	PFFZZ	77640	028295	.BEARING,WASHER,THRU HOUSING	3
26	PAFZZ	97370	E72800PC6	.RETAINER AND ROLLER STEERING COLUMN	2
27	PFFZZ	96906	MS27183-14	.WASHER,FLAT TOP COVER MTG	4
28	XDFZZ	77640	181378	.SCREW,CAP,HEXAGON JACKET CLAMPING	1
29	PFFZZ	96906	MS90725-67	.SCREW,CAP,HEXAGON H TOP COVER MTG	4
30	PAFZZ	77640	032261	.BOOT,DUST AND MOIST VALVE	1
31	PAFZZ	77640	415354	.ACTUATING,LEVER,STE	1

Current part is item (12) on diagram. Available at www.oshkoshequipment.com